ORM 13880 - 187
39

PACIFIC ELECTRIC RAILWAY COMPANY
TO
CITY OF LOS ANGELES

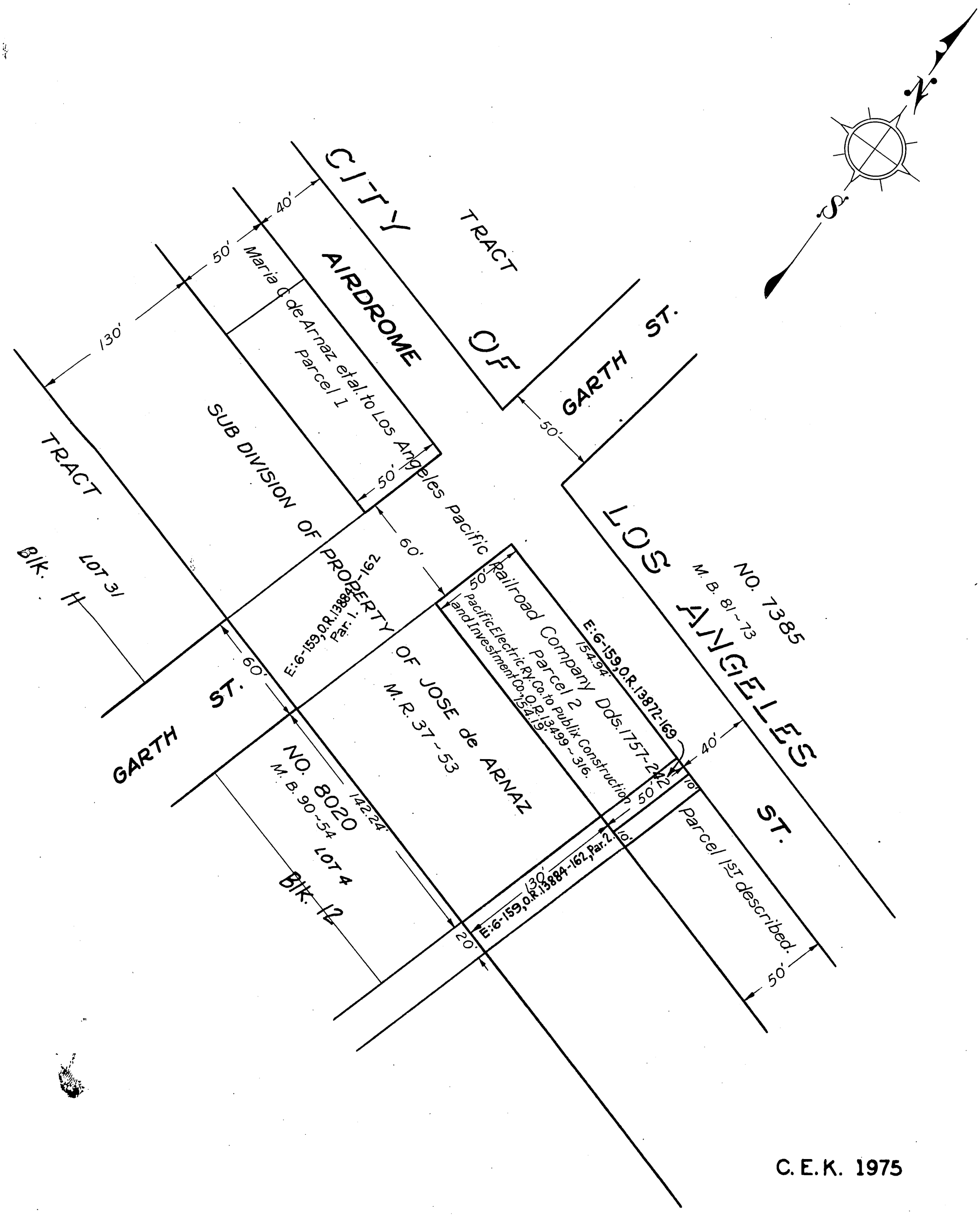

C. E. K. 1975

By L.C.
Comp. C.L.

INDEX 22
E: 6-165.

Scale:- 1"=50'

RECORDED — JAN. 6, 1936.

O.R. 13880