Michigan Ave. chg. to Foothill Blvd. - Ord's. 63592 & 71376.
Honolulu Ave. " " Tujunga Canyon Blvd. - Ord. 71956.

34 ORM - 391 - 83
35

PHILIP BEGUE & MARIA BEGUE
TO
COUNTY OF LOS ANGELES

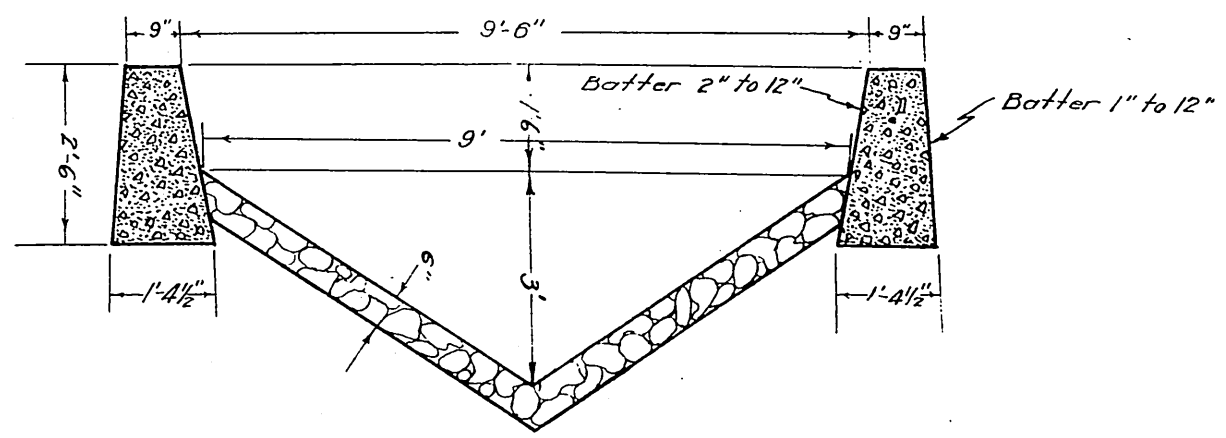

PROPOSED CROSS SECTION OF DITCH

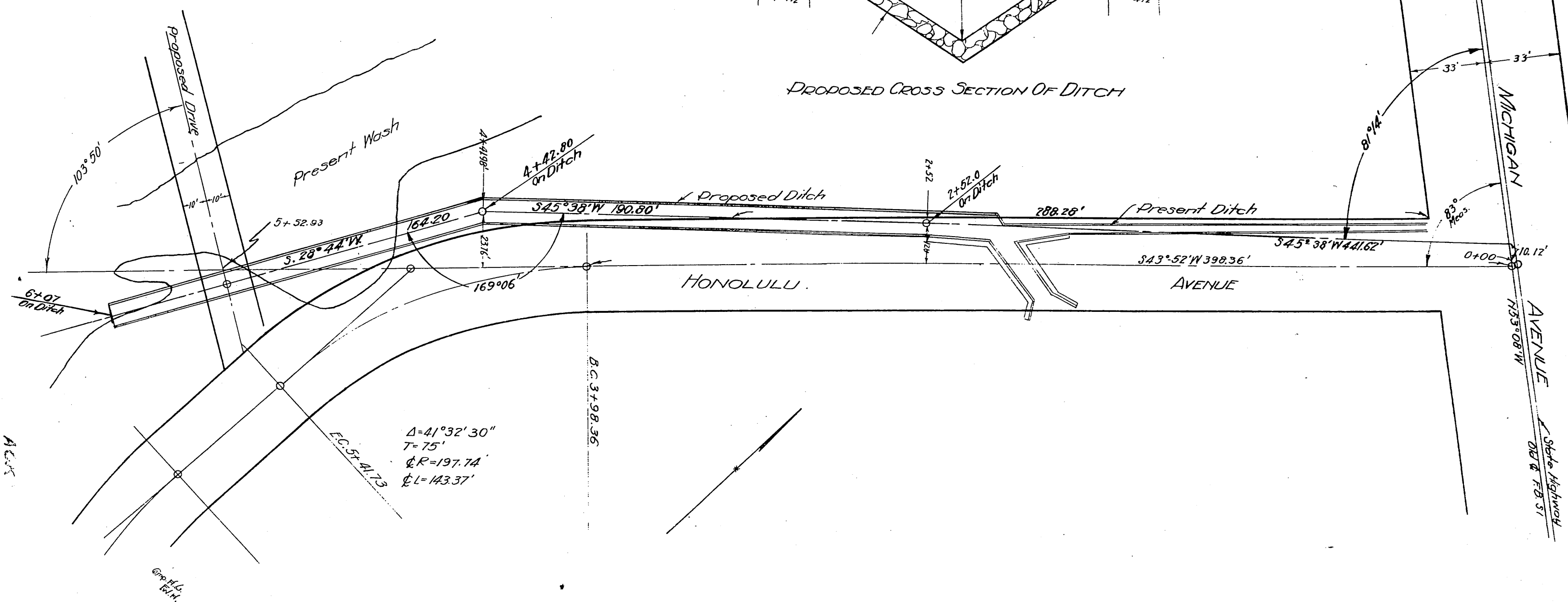

Rec. June 27, 1921

ACK
SHT. 51

O.R. 391

83